CARPAS VALPARAISO

# BODEGA

18X6 m

12X6 m

CARPAS VALPARAISO

# Consideraciones

**El propietario de la tienda tiene la única responsabilidad de asegurarse de que se siguen estas reglas locales y que el montaje sea el correcto.**

**En caso de malas condiciones climáticas, es su responsabilidad asegurarse de que las personas dentro están a salvo y que la tienda no cause daños a los demás.**

**Siempre se recomienda que asegure su tienda correctamente con correas de seguridad y amarras cuando coloque la estructura.**

**Le recomendamos que asegure la tienda, o compruebe si está cubierta por el seguro de tiendas de campaña en casa, en caso de eventos no planificados, accidentes o mal tiempo.**

**Estas tiendas de campaña están destinadas a refugio temporal y deben ser evacuadas en condiciones climáticas extremas.**

**siempre recomendamos eliminar la nieve de la parte superior.**

**Atención: Estas carpas están hechas para su uso en fiestas y otros arreglos festivos corporativos, y son como tales sólo para el montaje temporal a corto plazo y el desmontaje sucesivo. Tenga en cuenta que la garantía no se aplicará si se utiliza de cualquier otra manera.**

# Part list

| | | | 6x6 | 6x12 | 6x18 |
|---|---|---|---|---|---|
| 1 | Back leg | | 4 | 6 | 8 |
| 2 | Back leg | | 8 | 16 | 24 |
| 3 | Crossbar | | 8 | 16 | 24 |
| 4 | Ceiling rail | | 6 | 11 | 16 |
| 5 | Ceiling rail | | 6 | 11 | 16 |
| 6 | Extension pipe | | 4 | 4 | 4 |
| 7 | Corner arch | | 12 | 22 | 32 |
| 8 | Center arch | | 6 | 11 | 16 |
| 9 | Connecting pipe | | 44 | 99 | 154 |
| 10 | Connecting pipe | | 11 | 11 | 11 |
| 11 | Extension pipe | | 8 | 18 | 28 |
| 12 | Door Pillar | | 4 | 4 | 4 |
| 13 | Door pillar | | 4 | 4 | 4 |
| 14 | Cross bar | | 8 | 8 | 8 |
| 15 | Fastening bar | | 10 | 20 | 30 |
| 16 | Foot base | | 16 | 26 | 36 |
| 17 | Connecting component | | 4 | 4 | 4 |
| 18 | Peg 10x305mm | | 8 | 16 | 24 |



07-08-2013

| | | | | | |
|---|---|---|---|---|---|
| 19 | Peg 6x180mm | | 34 | 60 | 78 |
| 20 | Peg 8x300mm | | 24 | 44 | 64 |
| 21 | Spiral peg 10x400mm | | 4 | 4 | 4 |
| 22 | 1.75"Screw | | 6 | 11 | 16 |
| 23 | 2.5" Screw | | 12 | 22 | 32 |
| 24 | 4" Screw | | 70 | 124 | 180 |
| 25 | Wingnut | | 88 | 157 | 228 |
| 26 | Floor Bracket (set of 2 pcs) | | 4 | 8 | 12 |
| 27 | Bungee ball | | 96 | 96 | 96 |
| 28 | Spanner | | 2 | 2 | 2 |
| 29 | Bolt with nut | | 16 | 26 | 36 |
| 30 | Tie-down kit | | 4 | 4 | 4 |
| 31 | Steel clip | | 20 | 40 | 60 |
| 32 | Rope | | 4 | 4 | 4 |
| 33 | Rope | | 2 | 2 | 2 |

07-08-2013

## Attention

Please use gloves when assembling the metal frame portion of this unit. The metal components of this products have been treated,with a rust preventive coating that may feel oily to the touch. This coating is not dangerous, but may dirty your hands during assembly. We recommend that you wipe the metal parts clean with a mixture of warm water and dish detergent prior to assembly. Should your hands become dirty, simply wash with soap and water.

After the whole frames are set up, they should be the same as the pictures below.

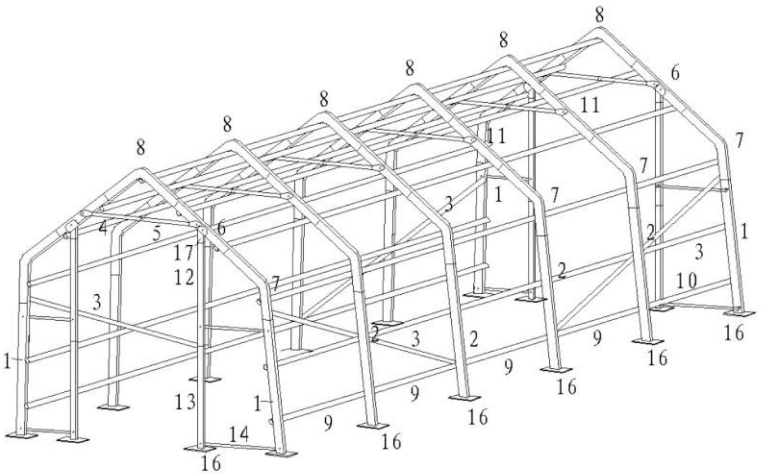

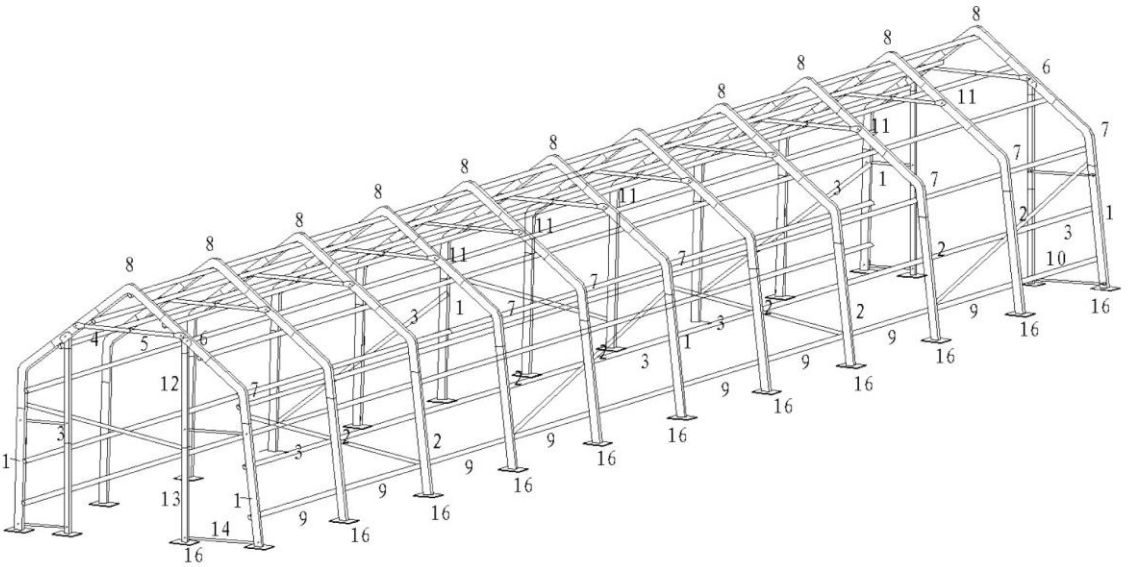

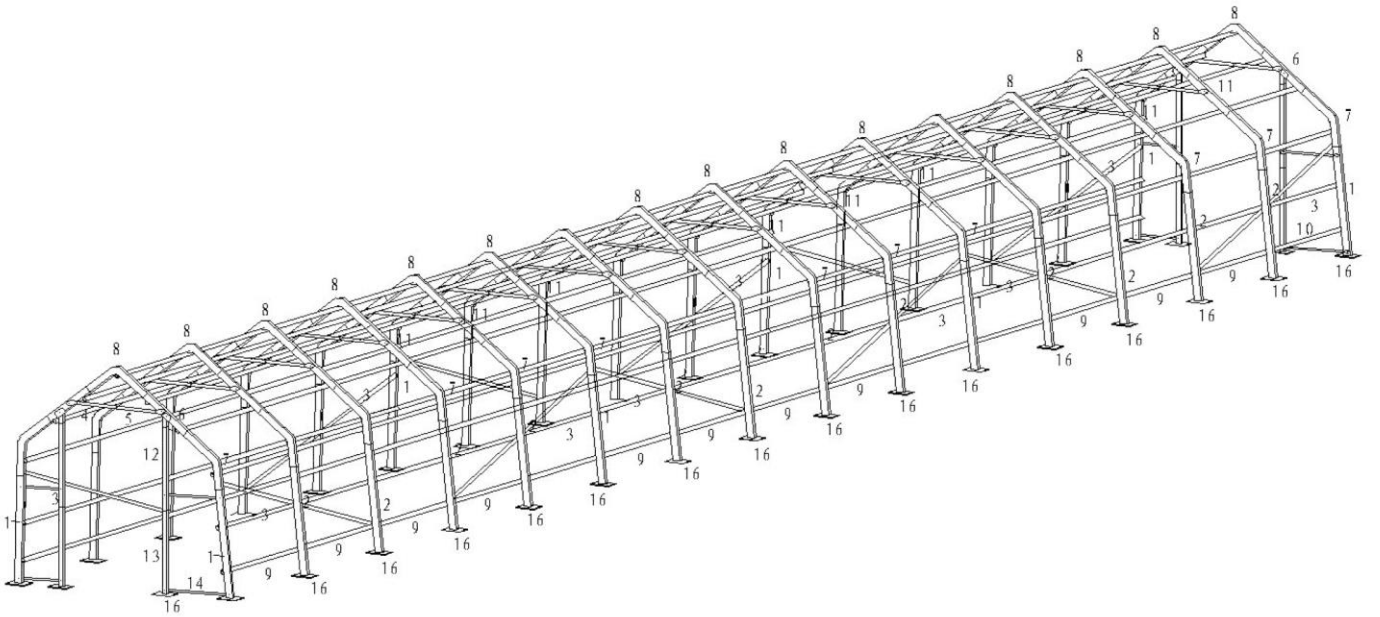

Please assemble the frame as below steps. They have similar assemble steps. Here we take 6x6 for example .

| | |
|---|---|
| Step 1<br>When assembling the tent, make sure that all the wingnuts are attached to the inside.<br>Connect one center arch pipe(8) with the extension pipe Attached the corner arch(7) to the ends of the extension pipe(6). Now connect the ceiling rail(4 and 5) with each other using the 1.75"(22) screw and the wingnuts(25). Connect the ceiling rail with respective extension pipe(6) using the 2.5"(23) screws and wingnuts(25). | 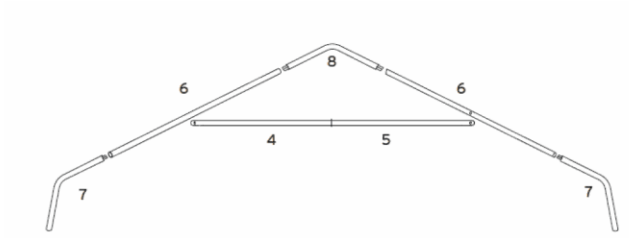 |
| Step 2<br>Repeat step 1 for the next 5/10/15 elements to place them on the ground one after another, as illustrated.<br><br>Attention: all elements with extension pipe no.6 need to be placed at the ends. Extension pipe no.6 has holes for door pillar. | 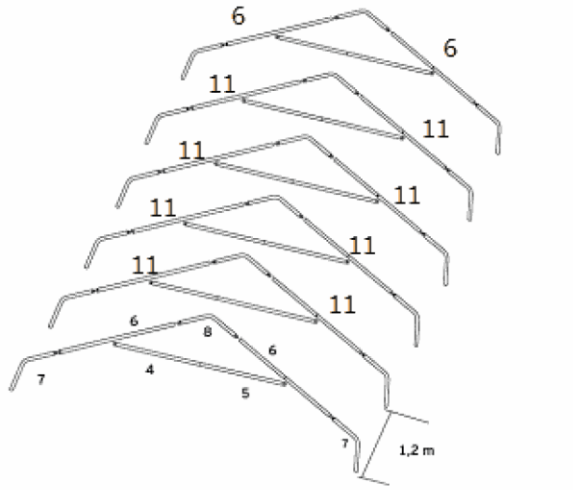 |
| Step 3<br>Now connect the 6 arch elements with each other using the connecting pipes (9 and 10). Not that only corner arch 10 are used for the front segments. Use the 4"(24) screw and wingnut(25) to tighten them. | 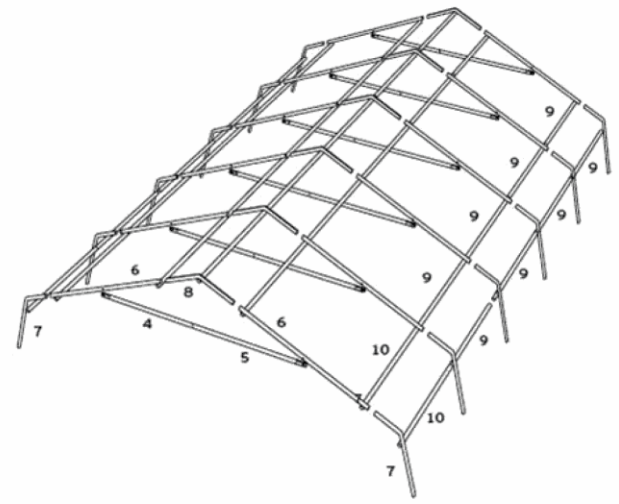 |

Step 4
Start setting up one side first. Connect the corner arches(7) to the legs (1 and 2). Secure the frame using the connecting pipes(9 and 10). Attach the diagonal pipes(3) to the back legs(1). Please refer to the complete frame pictures to attach the diagonal pipes.
Tighten the tent at the feet using the 4" screws(24) and the wingnuts(25).
Use the floor bracket(26) and the pegs 10x305mm(18) to fasten the frame to the ground.

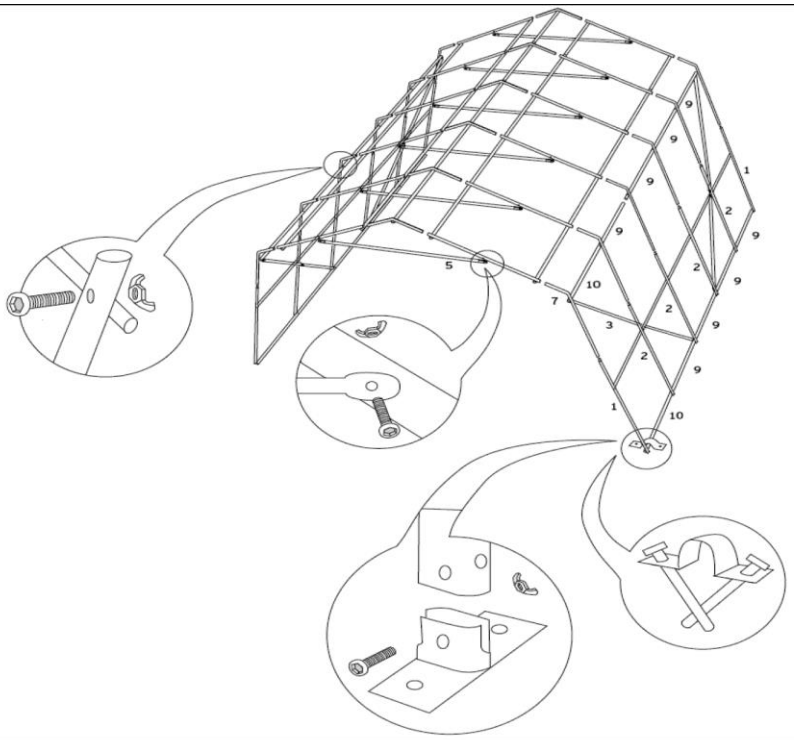


Step 5
Unfold the tent cover and put it over the frame.
Insert the fastening bar into the loop at the lower end of the rood and fasten it with steel clips(31).
Attach the endwall to the fram using the bungees.
Tension the roof cover to the tent frame to the ground using pegs 8x300mm(20)

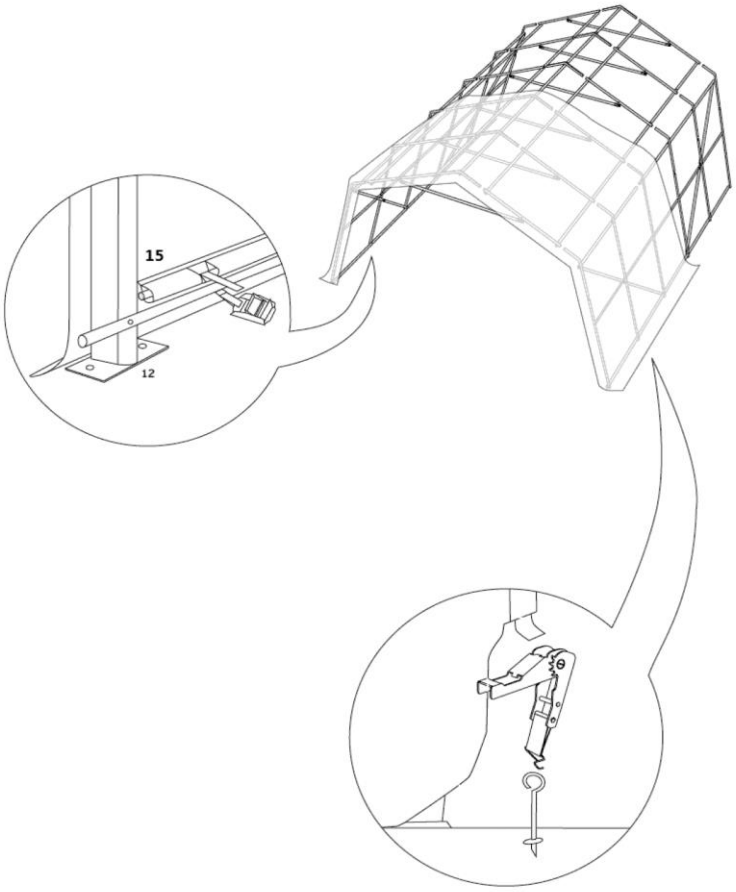

Step 6
Assemble the pillar set like below picture .

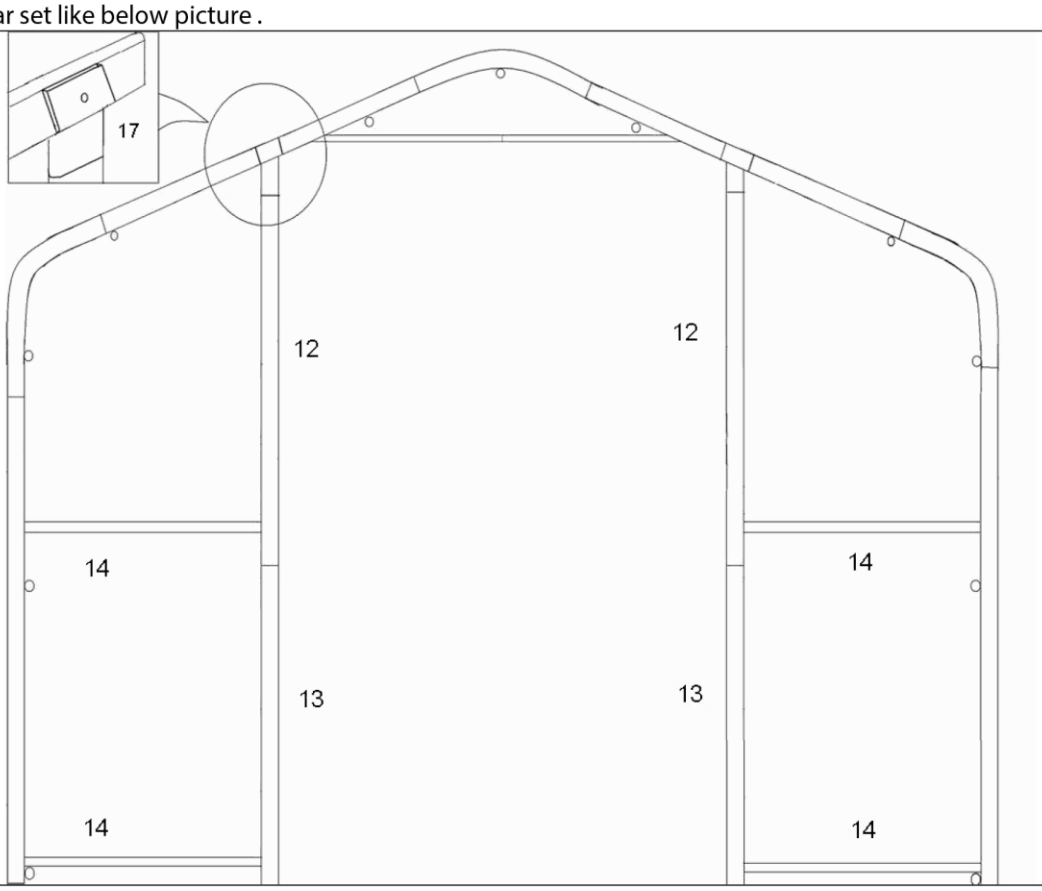


Step 7
Use ropes to attach the door and cover the the frame. To find a proper way and strength to attach the cover to frame carefully. Please do not use too much strength to tear the eyelet out of frabric

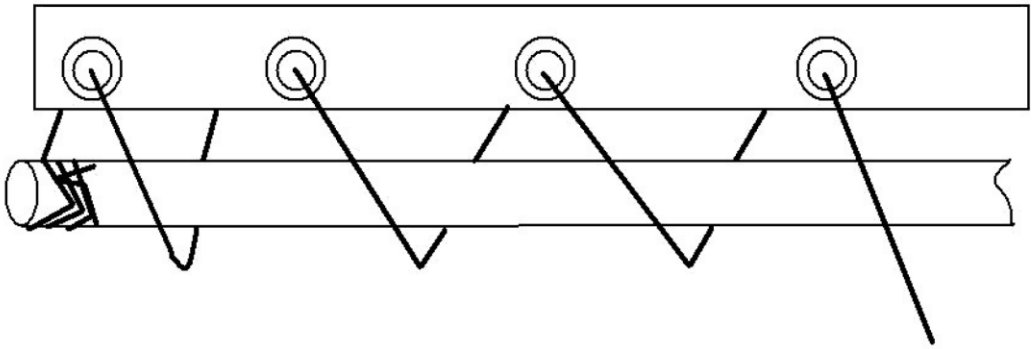

CARPAS VALPARAISO

## Contacto

Para solicitar una cotización formal para organismos públicos o privados, favor remita su email o llámenos a las siguientes direcciones:

Email

contacto@carpasvalparaiso.cl

WhatsApp

+569-58381809

+569-81298671

| Licitaciones públicas | Post venta |
| --- | --- |
| Contacto:<br>Esaú Vásquez Carmona<br>Director Comercial<br><br>Teléfono:<br>+569-58381809<br>32-3581168 | Contacto:<br>Hernán Vásquez Carmona<br>Director operaciones<br><br>Teléfono:<br>+569-58381809<br>32-3581168 |